CAD FILE:

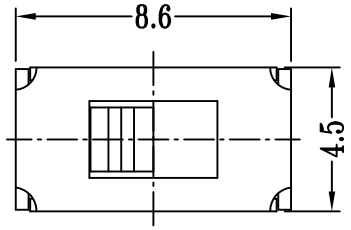

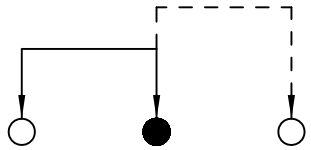

SCHEMATIC (NON-SHORTING)

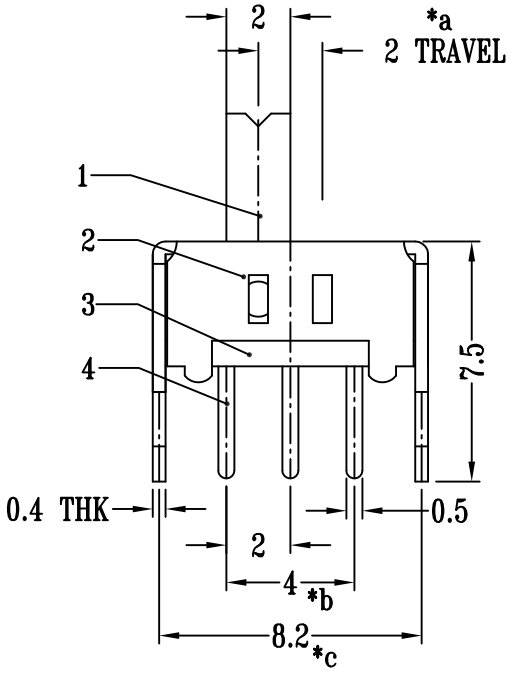

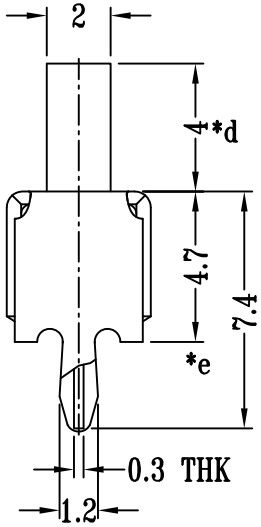

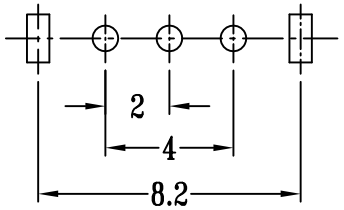

P.C.B LAYOUT
BOTTOM VIEW

注: “*”表示关键尺寸(5个)

NO.	PARTS	MATERIALS	Q'TY	FINISH
8				
7				
6	SPRING PLATE	PBS STRIP	1	NATURAL
5	CONTACT CLIP	PBS STRIP	1	Ag PLATED
4	TERMINAL	BRASS STRIP	3	Ag PLATED
3	BASE	PHENOLIC RESIN	1	NATURAL
2	FRAME	STEEL STRIP	1	Ni PLATED
1	KNOB	POM	1	BLACK

TOLERANCE UNLESS SPECIFIED				
WITHIN 1.5mm : ±0.1mm	A	2012-09-11	初 版	卢 业 创
OVER 1.5mm : ±0.2mm	ISSUE	DATE	DESCRIPTIONS OF REVISION	APPD.
TITLE : VERTICAL SLIDE SWITCH			UNIT : mm	DRWG NO.: LT-DR-SS12D02VG4-00
MODEL: SS12D02VG4			SCALE: 4:1	DWN. 余 丽 珍 2012-09-11
			CHK'D / APPD.	卢 业 创 2012-09-11